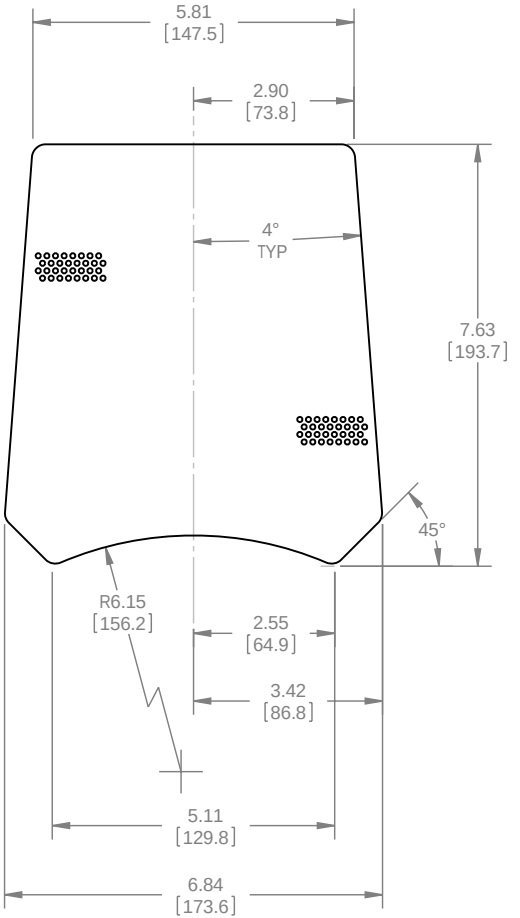
5.81
[147.5]
2.90
[73.8]
4°
TYP
7.63
[193.7]
45°
R6.15
[156.2]
2.55
[64.9]
3.42
[86.8]
5.11
[129.8]
6.84
[173.6]

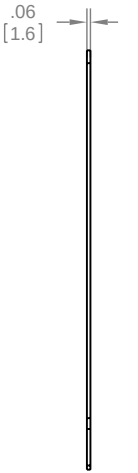
.06
[1.6]